Acrylic Molten Orb Hardwired Wall Sconce

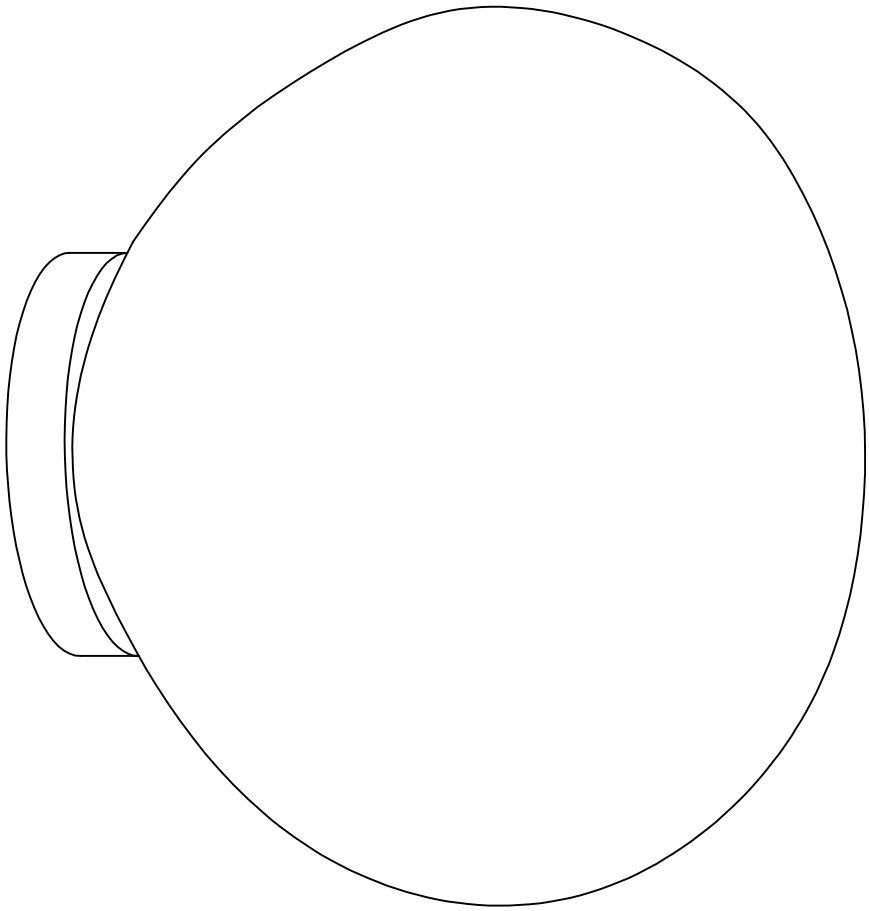

https://liora-light.com/ - support@liora-light.com

1

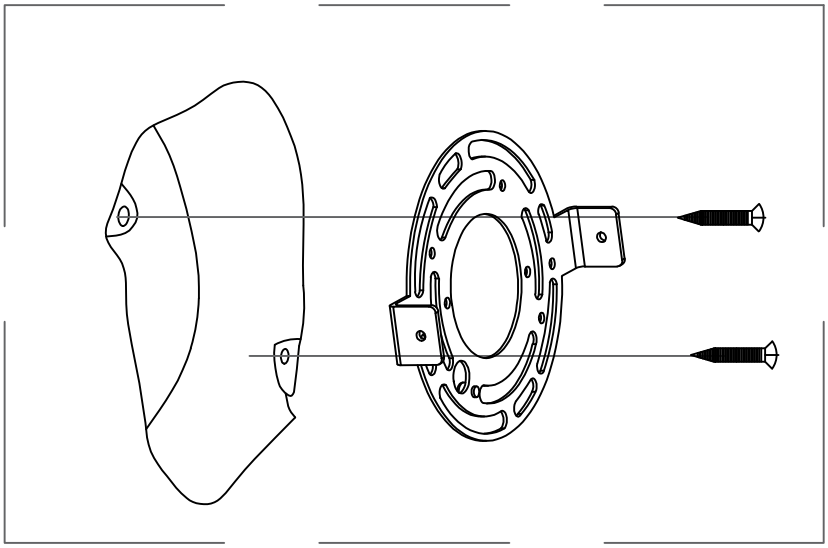

Fix the hanging plate to the wall with screws

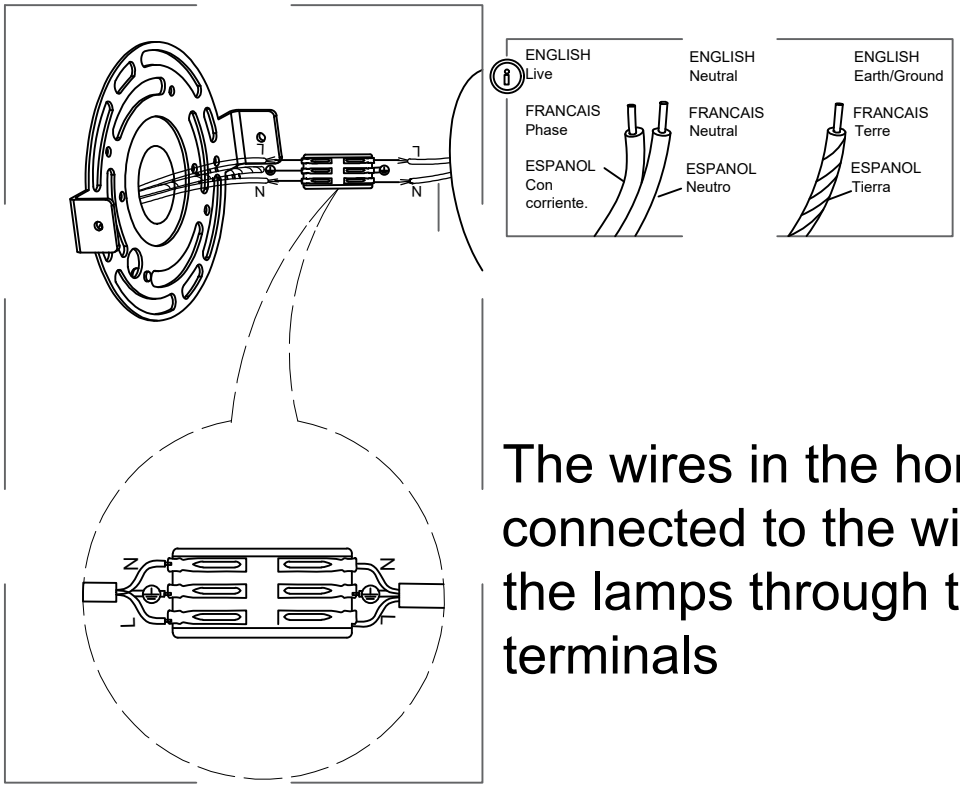

The wires in the home are connected to the wires in the lamps through the wire terminals

2

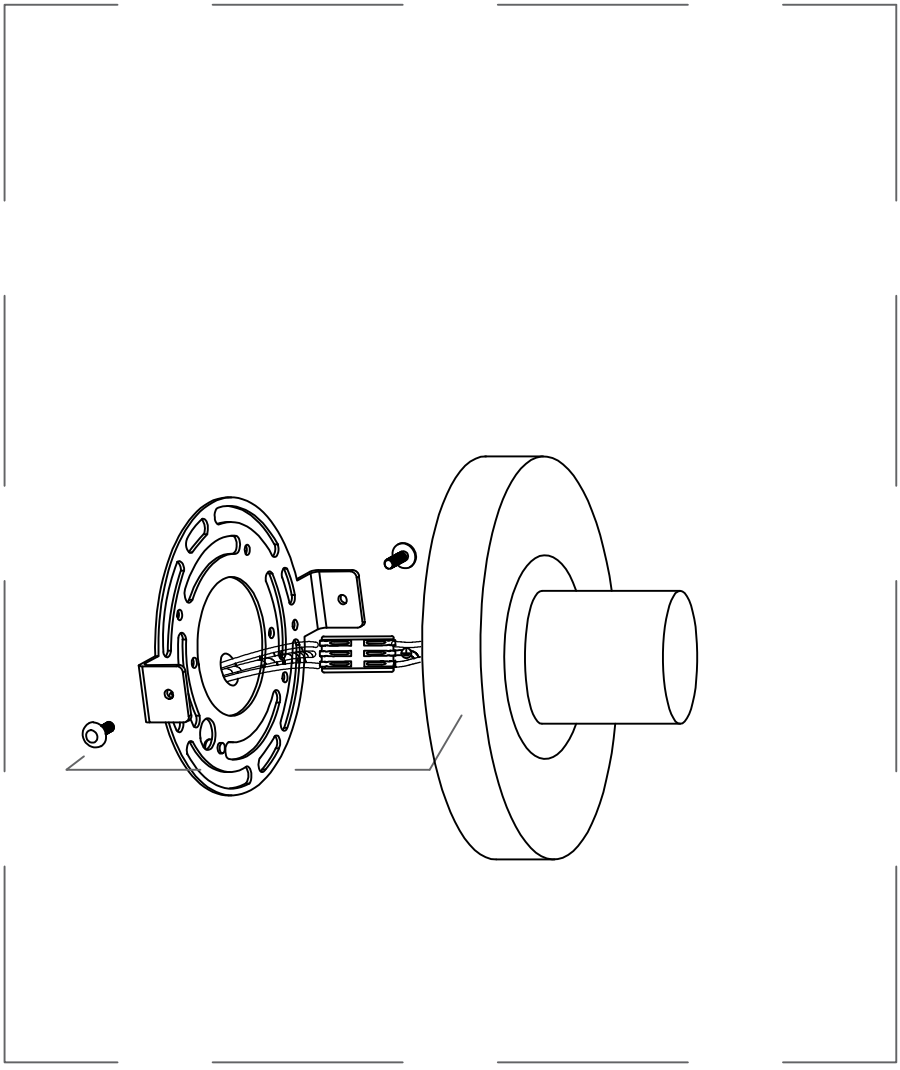

The side screws fix the lamp body to the hanging plate

3

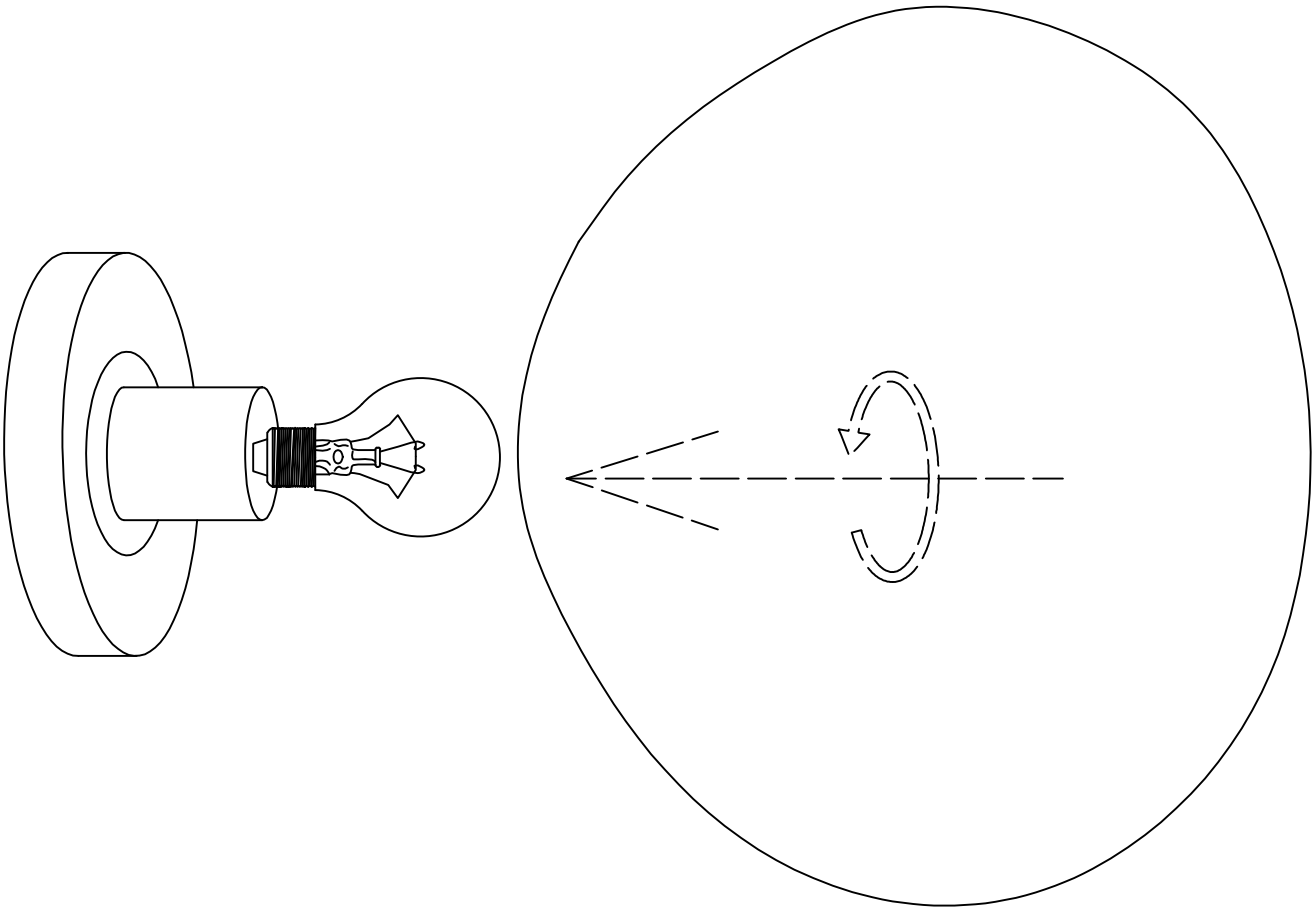

Install bulb and lampshade