Aureon Linear Rechargeable Wall Light

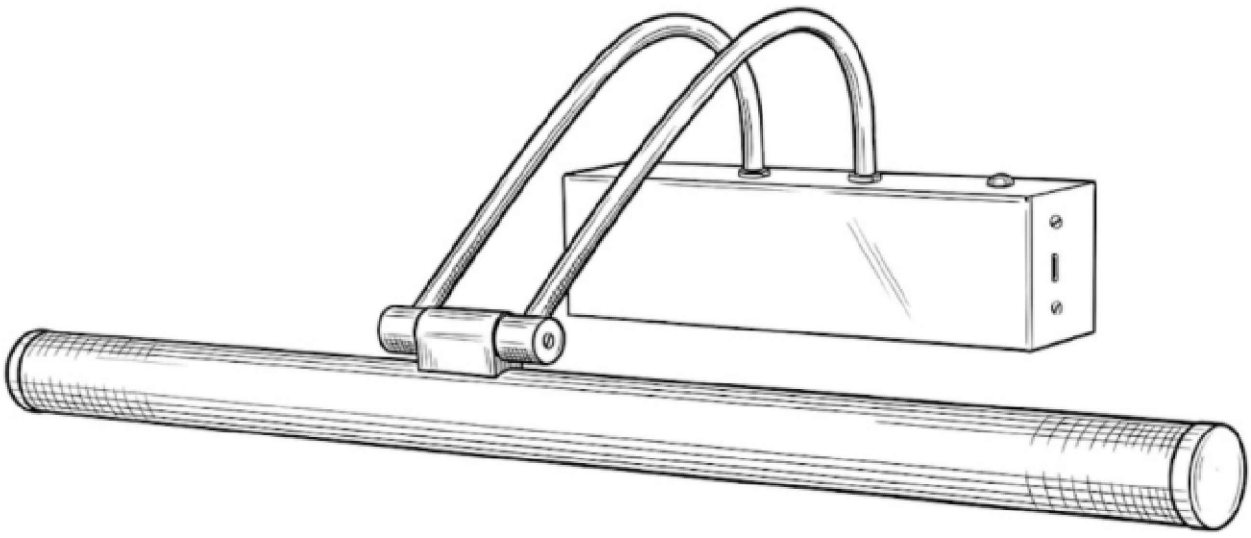

Remote Control Manual

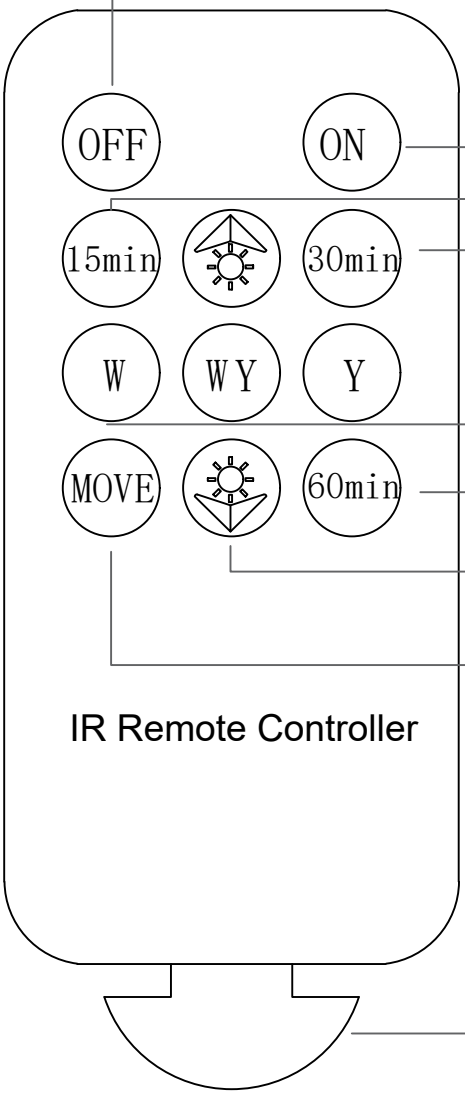

Turn off

Turn on

Delay off 15/30/60mins

(Press any key to cancel the delay)

Color temperature

White light/warm light/natural light

Dimming (10~100%)

Three fun play modes

* Please unplug the bottom

insulation paper for the first use

INSTALLATION INSTRUCTIONS

CAUTION

Turn off the power to the main circuit panel before starting.

CAUTION

The light source for this product is a non-replaceable LED. Do not disassemble the product, as the LED may damage your eyes.

Do not immerse in water.

⚠ WARNIINGS

Any changes or modifications not expressly approved by the party responsible for compliance may invalidate the user's right to operate the device.

IMPORTANT SAFETY

This product uses a polarized plug (one prong is wider than the other) to reduce the risk of electric shock. This plug can only be inserted into a polarized socket in one orientation. If the plug cannot be fully inserted into the socket, reverse the plug. If it still cannot be inserted, contact a qualified electrician. Never use an extension cord unless the plug can be fully inserted. Do not attempt to disable the safety features of the polarized plug. Do not modify the plug.

CAUTION

To prevent electric shock, align the wide prongs of the plug with the wide slot of the socket and insert it fully.

⚠ WARNIINGS

Failure to follow assembly instructions may result in a fire or electric shock hazard.

⚠ WARNIINGS

Different materials require different fittings. Always select screws and plugs specifically matched to the material.

⚠ WARNIINGS

Failure to follow assembly instructions may result in a fire or electric shock hazard.

⚠ WARNIINGS

Choking hazard. Keep the power cord at least 3 feet away from cribs, bassinets, and toddler beds.

⚠ CARE AND MAINTENANCE

Handle with Care: Please exercise caution during assembly and cleaning to avoid scratches or breakage.

Cleaning Instructions: Do not use any chemical solvents or abrasive cleaners on the lampshade, as they may damage the finish. Use only a soft, dry cloth to remove dust.

THIS PRODUCT IS NOT A TOY AND HAS NO PLAY VALUE.

Instructions for use of lamps

Brightness Adjustment(between 10% ~100%):

Method ①: When the light is on, press and hold the control button on the side of the bottom box to adjust the brightness.

Method ②: Use the remote control to adjust the brightness.

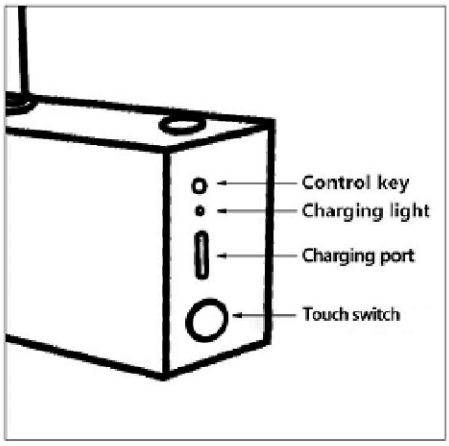

Color temperature adjustment:

Method ①: Click the control button on the side of the bottom box: 1st click: turn on the light (the initial light is white light) 2nd click: switch to warm light; 3rd click: switch to natural light; 4th click: turn off .

Method ②: Use the remote control to switch the color temperature.

Charging instructions:

When the light is dim, the power of the lamp is low and needs to be charged; the indicator light is red when charging, and the indicator light is green when fully charged.

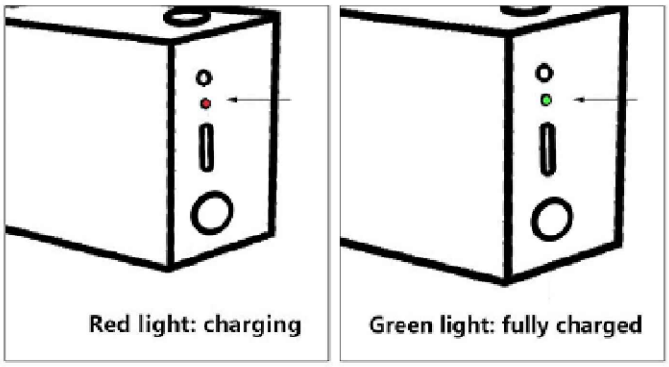

Installation

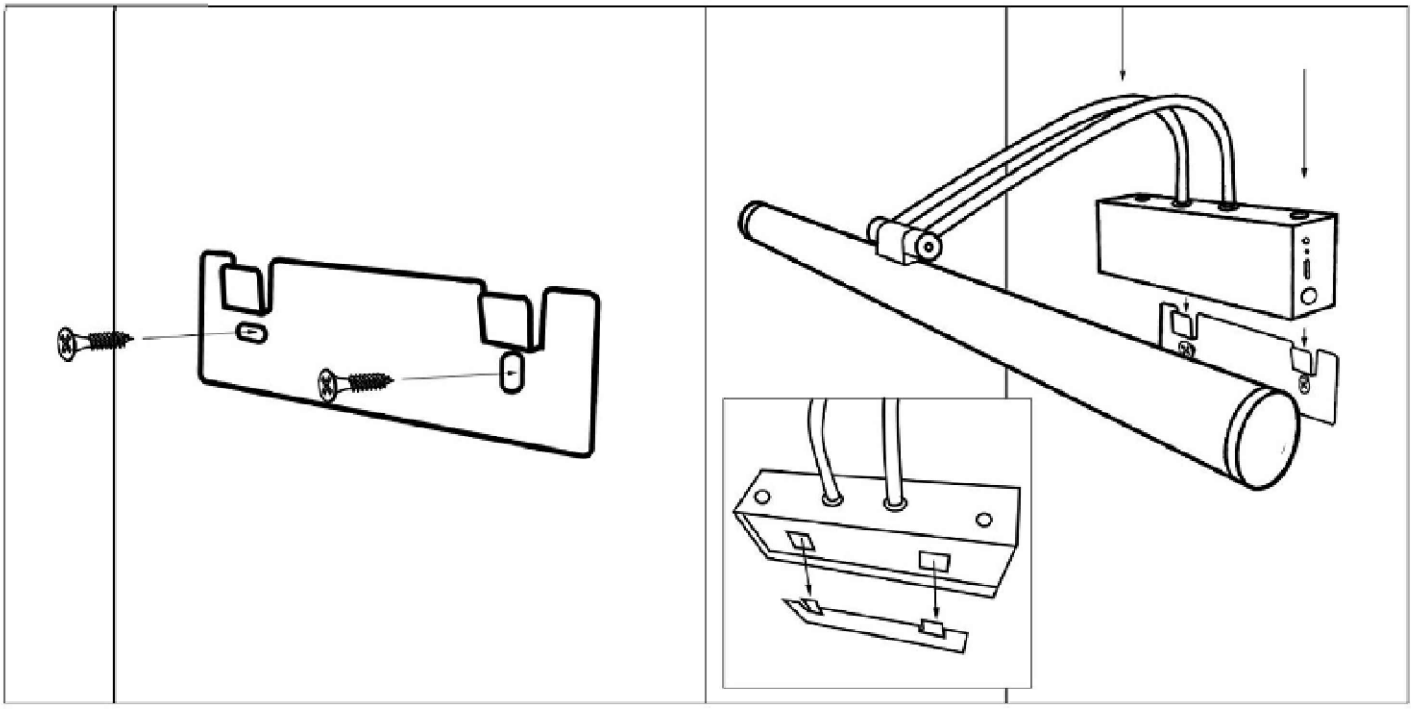

Step 1: Fix the base plate to the wall

Step 2: Put the lamp on the bottom plate