1

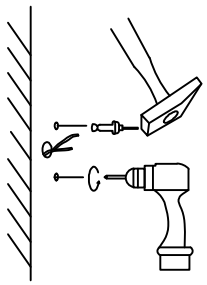

Drill holes in the wall and insert expansion screws

2

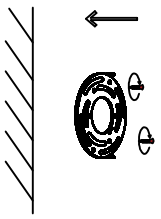

Install the hanging plate on the wall

3

The electric wires in the home connect to the light fixtures

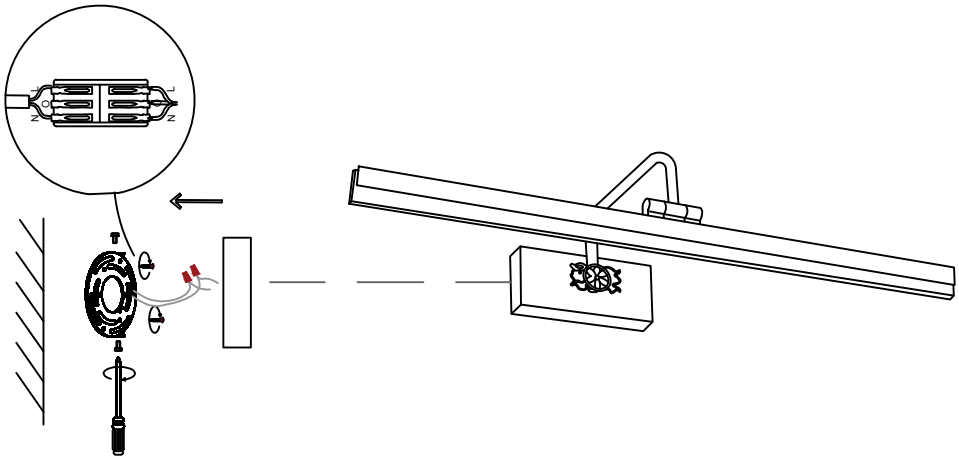

4

Install the lamp body on the hanging plate