Installation Instructions

1

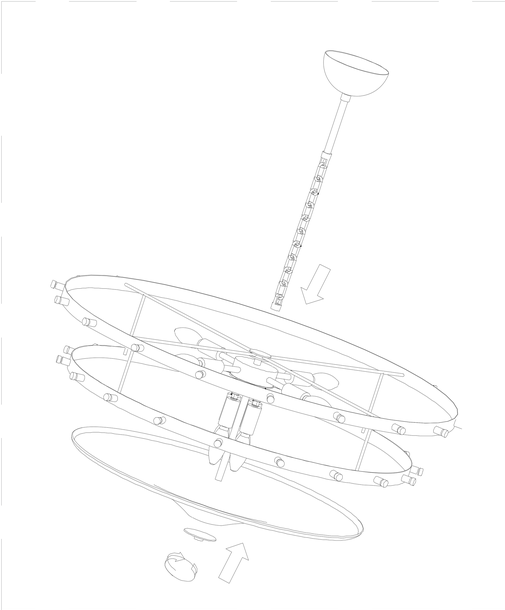

2

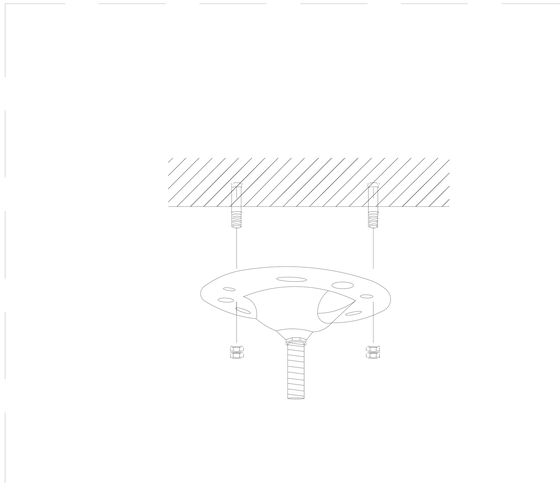

3

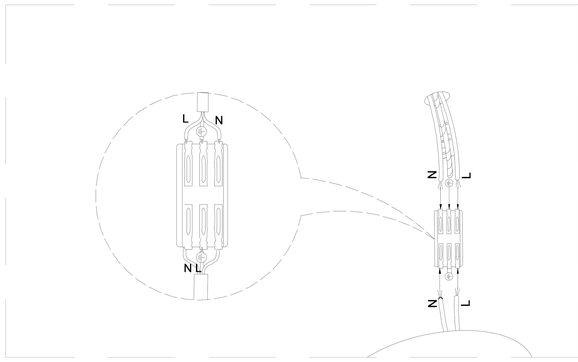

4

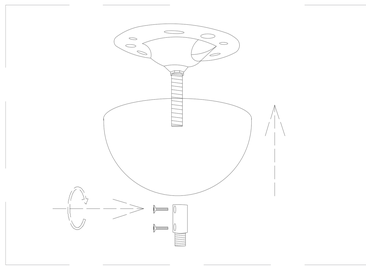

5

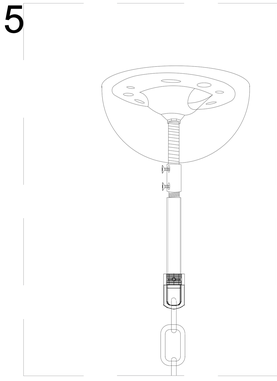

6

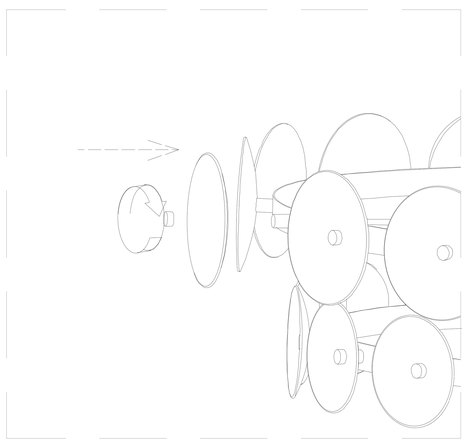

7

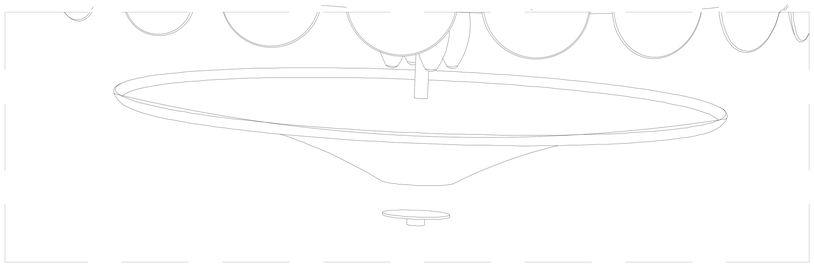

Note: Turn off the power to the main circuit panel before starting.

STRUCTURAL SUPPORT REQUIREMENT

Ensure the junction box or mounting surface is independent of the drywall and rated for heavy-duty fixtures.
Secure the mounting bracket directly to a ceiling joist or a structural support member capable of supporting at least 2x the fixture weight.

WARNIINGS

When unpacking, be careful not to pull wires, as a bad connection may result. Do not connect electricity until your fixture is fully assembled. To reduce the risk of fire, electrical shock, or personal injury, always turn off fixture and allow it to cool prior to replacing the lightbulb. Do not touch or look directly at the bulb when fixture is illuminated. Keep flammable materials away from lit bulb.

WARNIINGS

Choking hazard. Keep the power cord at least 3 feet away from cribs, bassinets, and toddler beds.

WIRING SAFETY NOTES

When connecting wires, please follow the standard color coding: black to black (live), white to white (neutral), and green/bare copper wire to ground.

RECOMMENDED

Please refer to the rated power at the lamp head, and do not exceed the recommended wattage to avoid fire hazards. When checking the circuit connections, the curtains need to be removed

CARE AND MAINTENANCE

Handle with Care: Please exercise caution during assembly and cleaning to avoid scratches or breakage.

Cleaning Instructions: Do not use any chemical solvents or abrasive cleaners on the lampshade, as they may damage the finish. Use only a soft, dry cloth to remove dust.